## SUITCASE

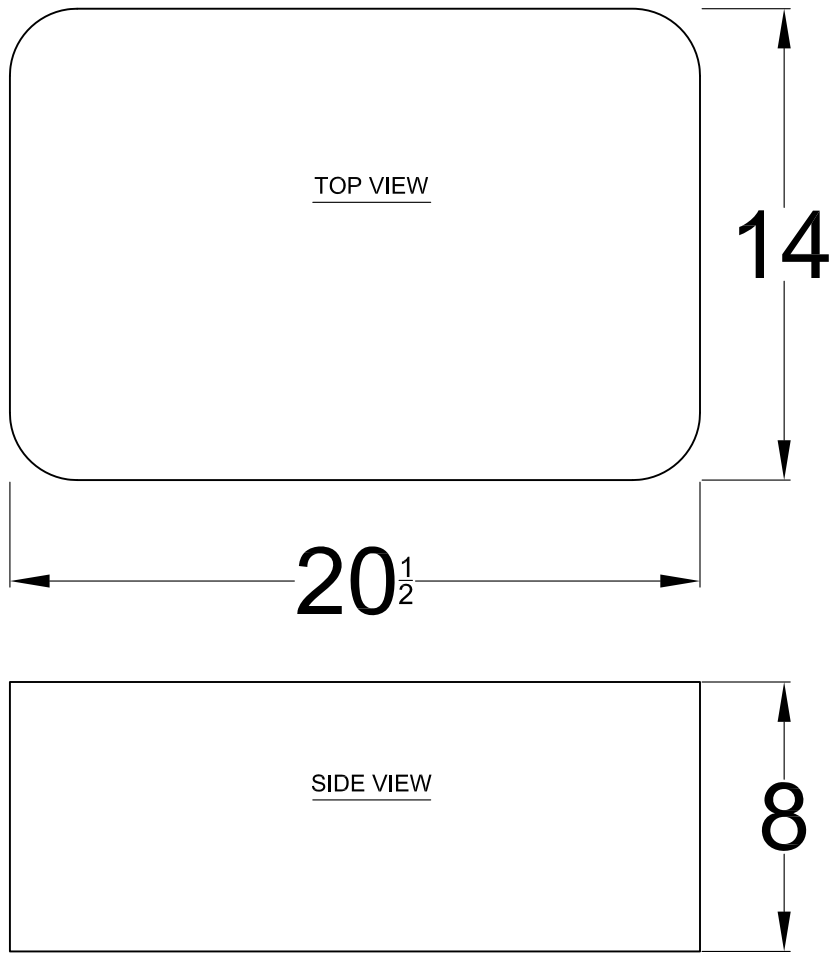


## VENTILATOR

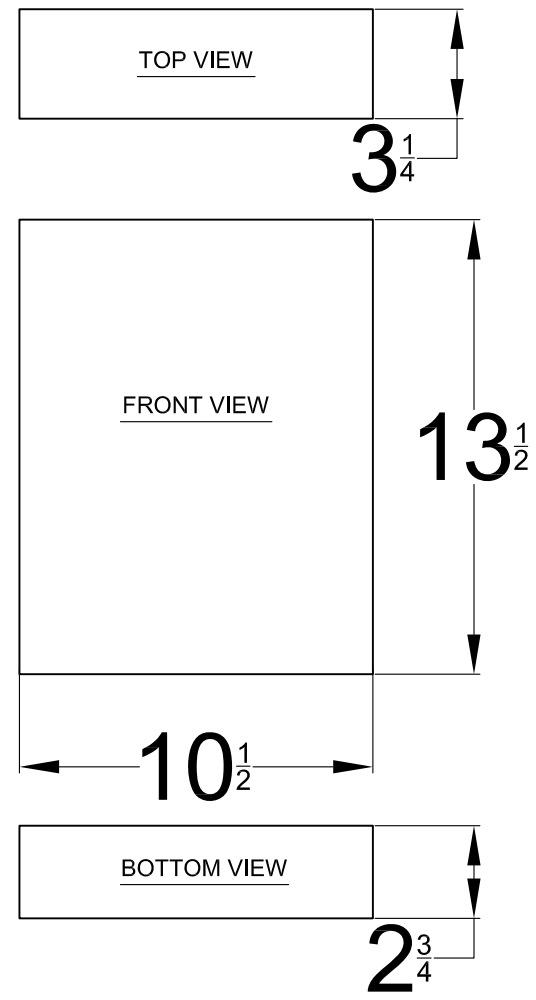


## SUCTION MACHINE

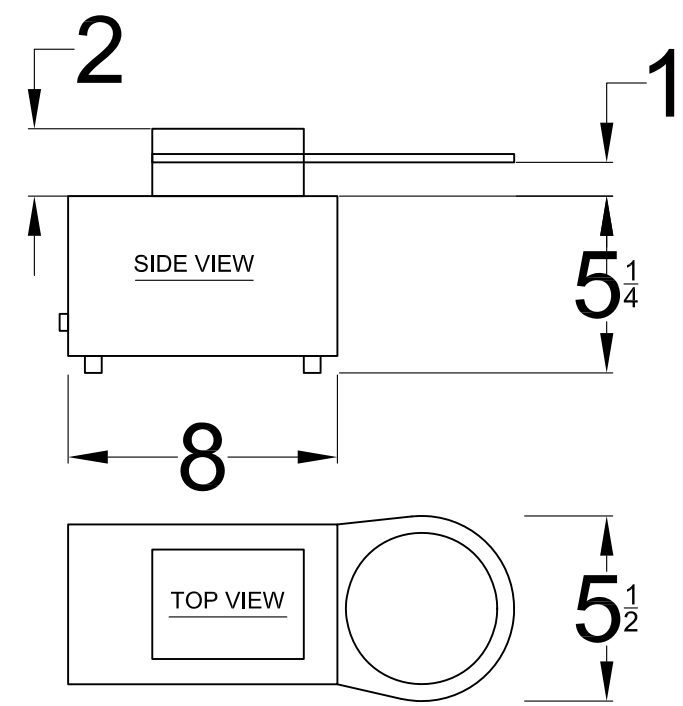


## NEBULIZER

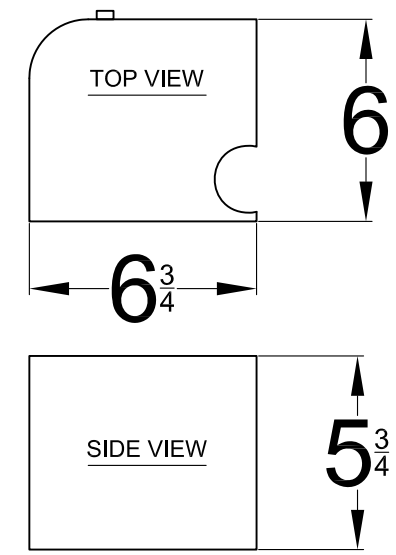


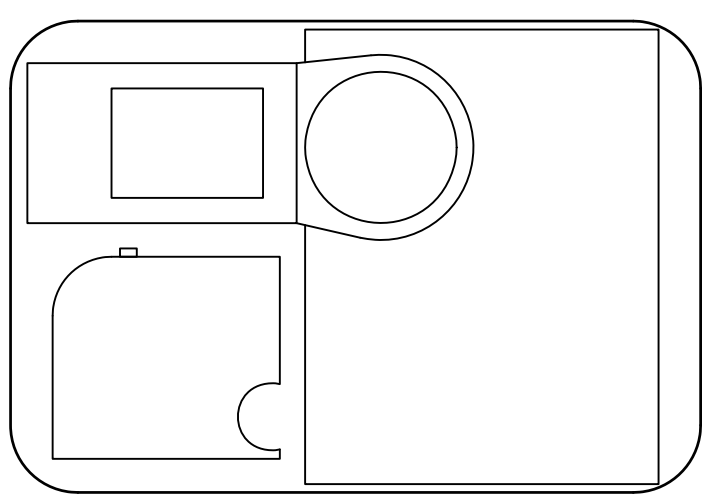

TOP VIEW

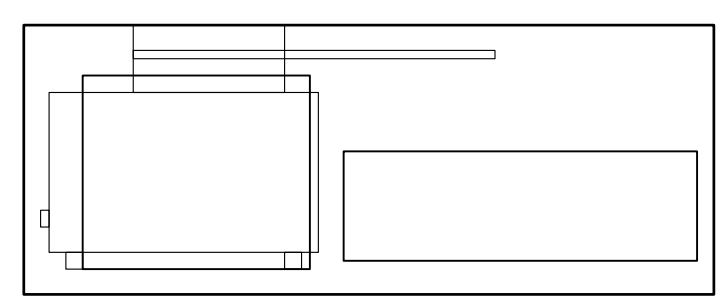

SIDE VIEW

| REV | DATE | DESCRIPTION | BY |
|---|---|---|---|
| | | | |
| | | | |
| | | | |

| | |
|---|---|
| CUSTOMER | MIKE & JEN |
| DWG. TITLE | VENTILATOR EQUIPMENT SUITCASE |
| DRAWN BY: MB — DATE: 5/7/05 | SCALE: NONE |
| CHECKED BY — DATE | CAD FILE NAME: SUITCASE.DWG |
| APPROVED — DATE | DRAWING NO.: 1 OF 1 — REV |